ООО ХУБЕР Текнолоджи

HUBER Drum Screen LIQUID

Reliable fine screening with maximum separation efficiency

- **Maximum retention of fibres and hair**
- **Operating reliability for membrane bioreactors**
- **Maximum COD / BOD$_5$ reduction rates**

The HUBER Drum Screen LIQUID is available in different designs and suitable for numerous applications of solids-liquid separation. Depending on the specific application requirements the horizontal drum is covered with a **mesh**, **wedge wire** or **perforated plate** and is suitable for channel or tank installation.

Design and Function

The characteristic feature of the HUBER Drum Screen LIQUID is its screen basket which is horizontally installed in the channel or in a tank. The wastewater to be treated flows through the basket from inside to outside. Whilst the wastewater flows through the open front into the screen basket, solids are retained within the drum. A special sealing between the channel and the front-end screen basket opening prevents unscreened wastewater from passing through the screen basket.

The solids settling on the drum surface lead to gradual blinding of the surface. As a result, the water level upstream of the screen rises. When the predefined maximum water level has been reached, the screen basket starts to rotate around its axis to clean its surface. At its crown a spray nozzle bar sprays water onto the drum surface from outside to remove the solids and flush them into a trough inside the drum basket from where the screenings are discharged by gravity.

Model variations

Drum Screen LIQUID ww: wedge wire

- Wedge wire sizes 0.5 / 1 / 2 / 3 mm
- Solids retention up to 10,000 m³/h per machine
- Typical applications: Mechanical pretreatment on sewage treatment plants, industrial solids-liquid separation

Drum Screen LIQUID pp: perforated plate

- Perforations 1.5 / 2 / 3 mm
- High separation efficiency and retention of fibres and hair
- Typical applications: Protection of membrane filtration plants

Drum Screen LIQUID star: folded perforated plate

- Perforations 1 / 1.5 / 2 mm
- Increased screen surface for higher throughputs, high separation efficiency and retention of fibres and hair
- Typical applications: Protection of membrane filtration plants

Drum Screen LIQUID mesh: fine mesh fabric

- Mesh sizes from 0.2 up to 0.75 mm
- Maximum separation efficiency and reduction of COD and BOD by 20 – 40%
- Typical applications: Load reduction in the preliminary treatment stage, replacement for primary settlement tank, sea and river outfall applications

преимущества

THE BENEFITS OF THE ROMESH® SCREEN

- The square mesh provides a defined separation size
- Low headloss
- Mechanical COD/BOD reduction by up to 30 %
- Filterable solids (AFS) reduction by up to 60 %
- Optional periodic high pressure cleaning (120 bar)
- Addition of precipitants and flocculants reduces AFS up to 95%, COD/BOD up to 65%, phosphorus up to 60%.
- Enclosed, compact design
- Very high hydraulic throughput

PDF скачать

проспект: Фильтрующий барабан для тонкой мех. очистки HUBER ROTAMAT® RoMesh® [pdf, 613 KB]

примеры из практики

- Implementation of economically efficient septic tank systems in the range of 10,000 to 20,000 p.e.
- HUBER Drum Screen LIQUID - innovative overall process succeeds in Norway
- Busy - the mobile plants with HUBER Drum Screen LIQUID help in planning and operation
- HUBER supplies a process system as replacement for the primary settling tank
- Carbon removal with HUBER fine screening technology – a success story
- New product HUBER Drum Screen LIQUID: Increasing requirements need adapted solutions
- Mechanical wastewater pre-treatment for membrane bioreactors

схема

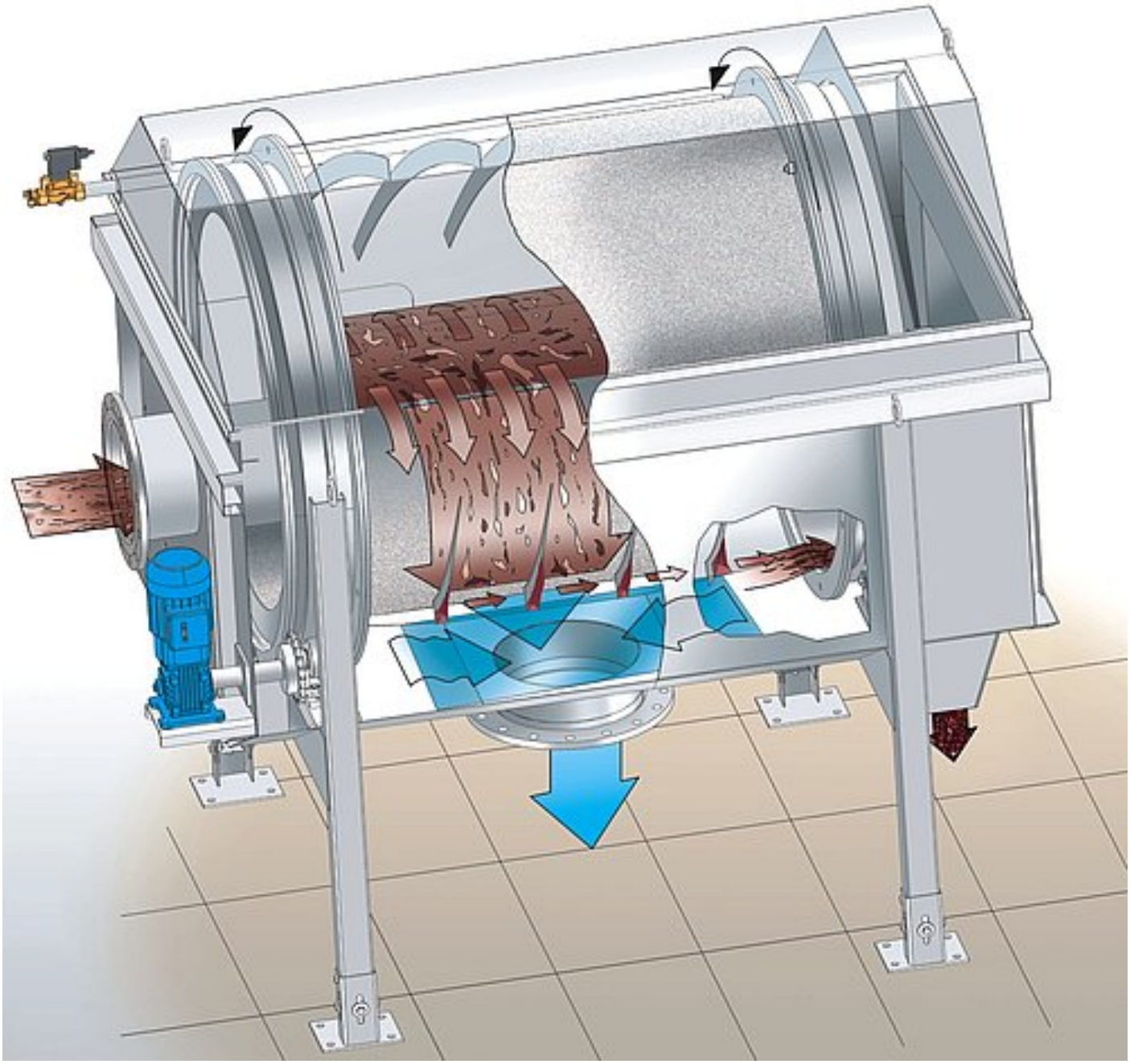

Media

Video: HUBER Drum Screen RoMesh®

https://www.youtube.com/watch?v=nNstEvZA-24

другое оборудование серии Установки тонкой фильтрации

- HUBER Барабанное сито ROTAMAT® RoMem
- HUBER Фильтрующий барабан RoMesh®
- HUBER Самопромывной дисковый фильтр RoDisc®

Генеральный директор: Железнов Алексей Игоревич

Адрес: пр-кт Андропова 18, к. 6 · 115432 Москва · Россия · Телефон: +7 499 6830048 · Факс: +7 499 6830048
www.huber-technology.ru · www.huber.de · E-mail: huber@mail.ru · info@huber-technology.ru

Банк ЗАО «ЮниКредит Банк» г. Москва · Расчетный счет: 40702810900010660385 · БИК: 044525545
Корресп. счёт: 30101810300000000545